22n 1kV film high pulse cap, Kemet R75QI2220AA00J, Digikey #399-5903-ND
4.7uH 12A inductor, Bourns Inc. 12A 15mR shielded, Digikey #SRP1245A-4R7MCT-ND
4A 600V SiC diode, Cree C3D02060F 0ns TO220, Digikey #C3D02060F-ND
Isolated gate driver 4A 12V drop out, Silicon Labs SI8261BCC-C-IS 4A 3750V 8-SOIC, Digikey #336-2420-5-ND
DC-DC converter 12V->15V 1W, CUI PDS1-S12-S15-S 105C 1W, Digikey #102-2739-ND
40A 250V Schottky, On Semi MBR40250G, Digikey #MBR40250GOS=ND
200R 3W resistor, Panasonic ERG-3SJ201 metal oxide film, Digikey #P200W-3BK-ND

For input, influence, or ideas, special thanks to:

Mohammadjavad Baei
Matt Fox
Daniel Jury
Andrew Lapthorn
Bart Wenmeckers
Ian Williamson

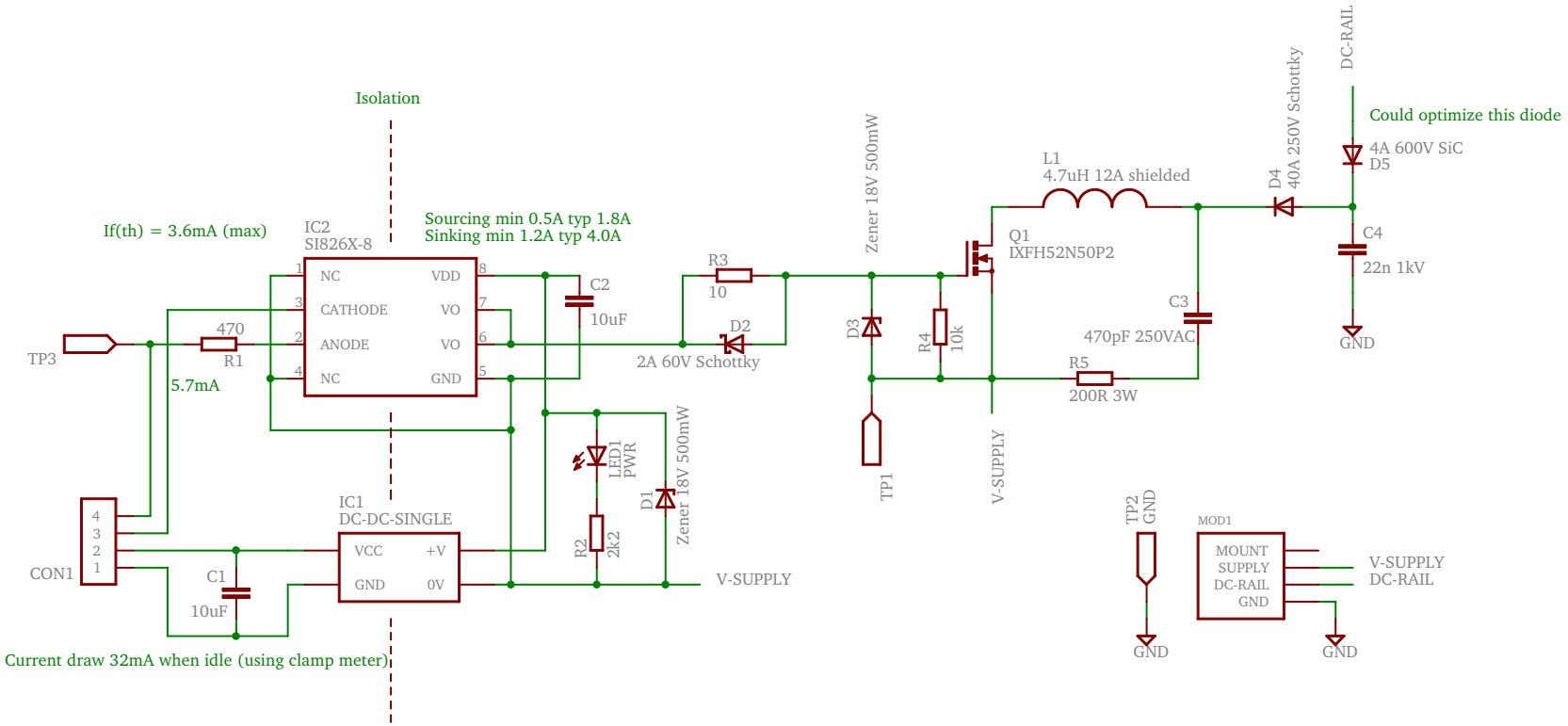

Refer to paper A new ZVS-PWM Full Bridge Boost Converter - Mohammadjavad Baei, University of Western Ontario

Released under the Creative Commons Attribution Share-Alike 3.0 License
http://creativecommons.org/licenses/by-sa/3.0
Design by Martin van den Nieuwelaar, martin@gadgets.co.nz

Baei circuit

TITLE: baei-v103

Document Number: REV:

Date: 6/19/2017 15:49:52 Sheet: 1/1